Data Sheet

Article number: 203350M16100B1T
Description: E+G levelling foot
GN 33-50-M16-100-B1-T, Stainless steel
Note: T Without nut, Wrench flat at the bottom

Measures

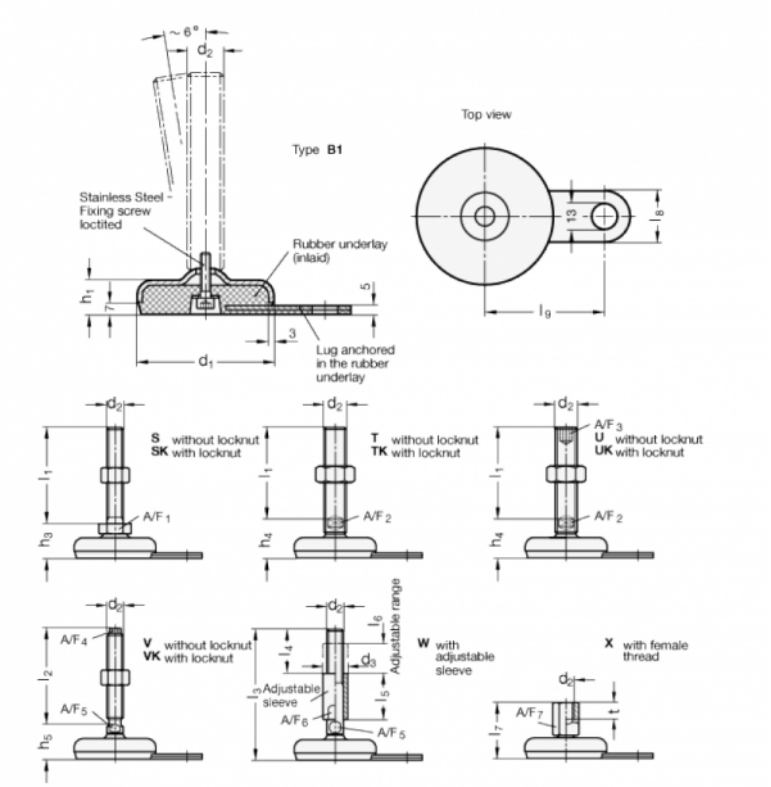

A/F2 = 12
d1 = 50
d2 = M16
h1 = 18
h4 = 32
l1 = 100
l8 = 25
l9 = 45

Product drawings and brochures of any kind may contain errors for which Brd. Klee A/S cannot be liable.